JLSHND10LS4S4F	Sym.	Description	Rev. No.	Date	Confirmed by
	1				
	2				
	3				
	4				

A	No.	Parts No.	Parts Name	Material	Spec.	Weight	Remark

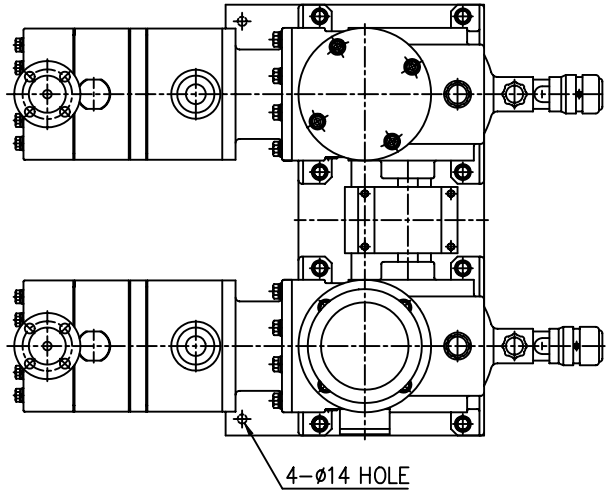

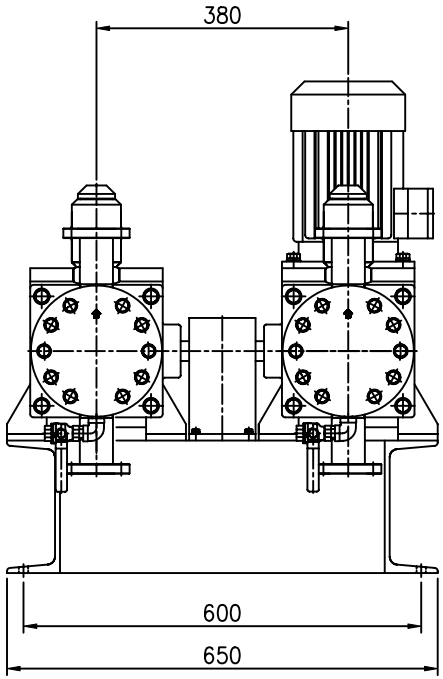

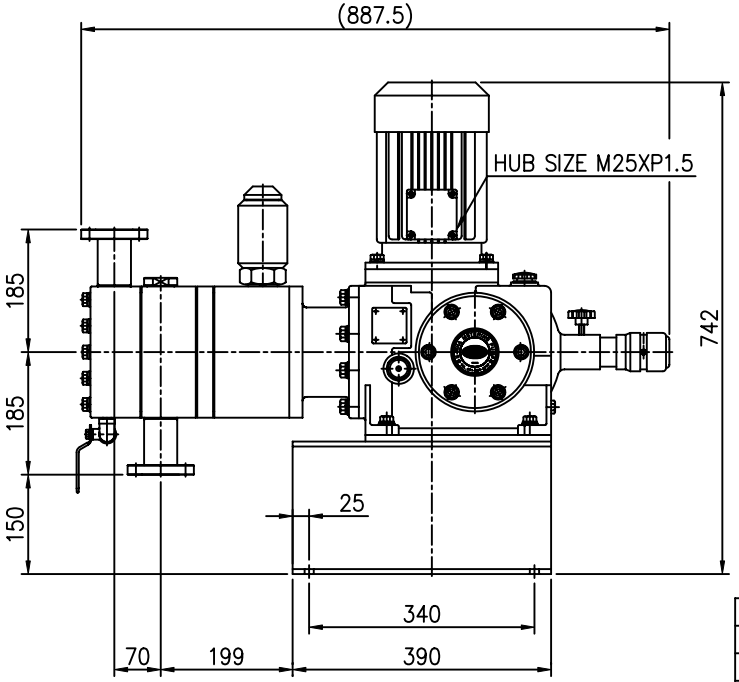

이 도면은 (주)이화정량펌프의 기술 자산입니다. 불법 유출시 관계법과 회사 규정에 의해 처벌 됩니다.

Projection		Trigonometry		Drawing Name	DIMENSIONAL OUTLINE
Scale	1 / 8	Unit	mm		
Drawn by	Designed by	Checked by	Approved by	Application	JLSHND10LS4S4F
2004.01.04 S.Y. JIN	W. PARK	W. PARK	S.C. KIM	Drawing Number	G0168E3009A

E-WHA CHEMICAL FEEDER CO., LTD.