| EWS25PCFD | Sym. | Description | Rev. No. | Date | Confirmed by |
|---|---|---|---|---|---|
| | 1 | | | | |
| | 2 | | | | |
| | 3 | | | | |
| | 4 | | | | |

| A | No. | Parts No. | Parts Name | Material | Spec. | Weight | Remark |
|---|---|---|---|---|---|---|---|
| | | | | | | | |

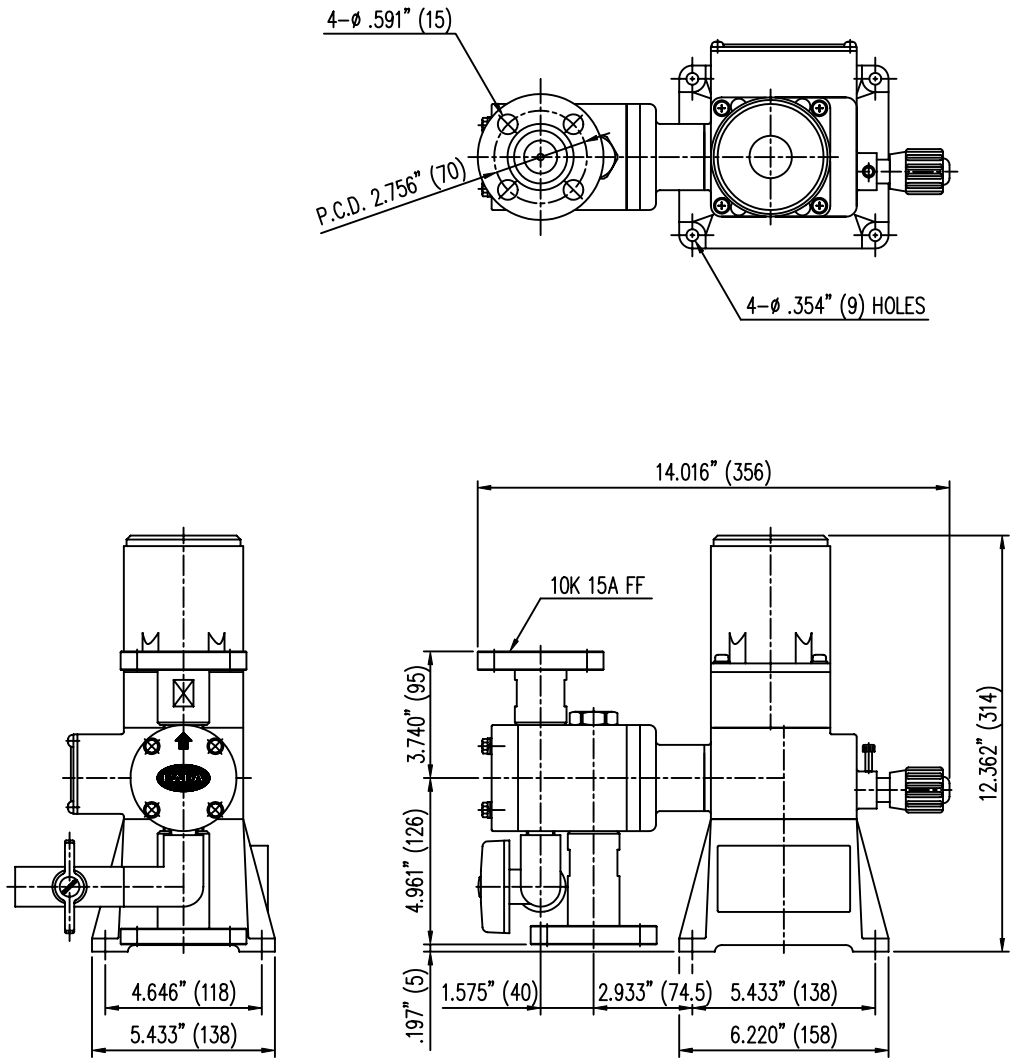


이 도면은 (주)이화정량펌프의 기술 자산 입니다. 불법 유출시 관계법과 회사 규정에 의해 처벌 됩니다.

| Projection | | Trigonometry | | Drawing Name | DIMENSIONAL OUTLINE |
|---|---|---|---|---|---|
| Scale | N / S | Unit | inch(mm) | | |
| Drawn by | Designed by | Checked by | Approved by | Application | EWS25PCFD-15A FF |
| 2001.05.16 H.J.SEO | W. PARK | W. PARK | S.C. KIM | Drawing Number | A0000E3042 |

E-WHA CHEMICAL FEEDER CO., LTD.